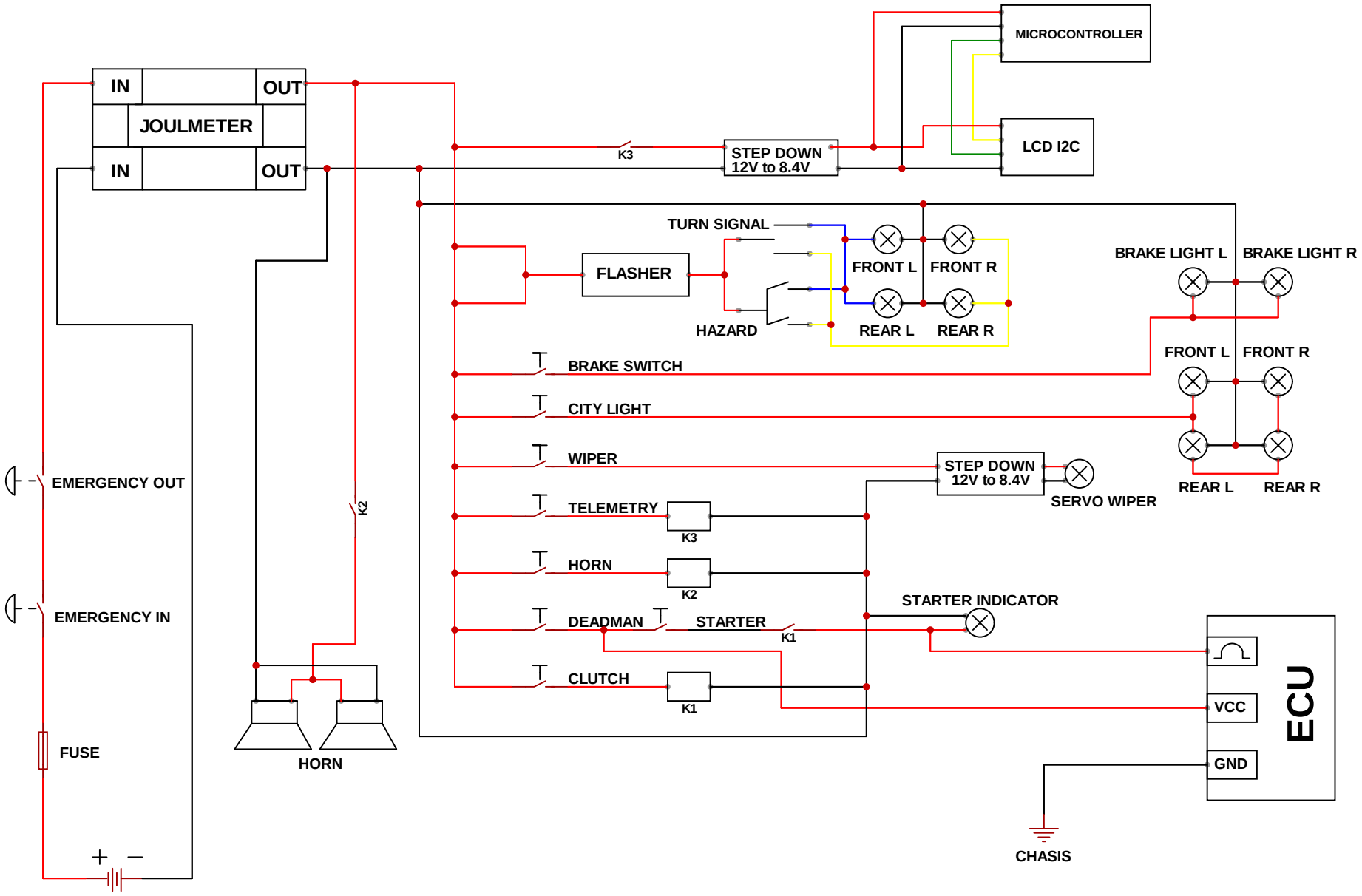

TITLE:	WIRING URBAN ETHANOL KMHE 2026	REV: 1.0
SEMERU TEAM UNIVERSITAS NEGERI MALANG	Company: SEMERU TEAM	Sheet: 1/1
	Date: 23-04-2026	Drawn By: SEMERU TEAM